客户 Customer

产　品　规　格　书
Product Specification

产品：磷酸铁锂电芯

Product: Lithium $LiFePO_4$ Cell

电池型号：32700-7000mAh

Cell type: 32700-7000mAh

编　制 Compilation	罗泽明 Ze Ming Luo	日　期 Date	2025-3-28
审　核 Checked	洪天立 Tian Li Hong	日　期 Date	2025-3-28
批　准 Approved	傅昭 Zhao Fu	日　期 Date	2025-3-28

客户签字确认/日期 Customer Approval/Date	

2025 年 3 月 28 日发布　　2025 年 3 月 28 日实施

注：本公司电子文件及加盖红色“受控文件”印章的打印文件为受控文件，其它打印文件为非受控文件

文件修改履历

版本	章节号	修改内容	修改日期	修改人
A0		初版 First Version	2025-3-28	罗泽明 Ze Ming Luo

注：本公司电子文件及加盖红色“受控文件”印章的打印文件为受控文件，其它打印文件为非受控文件

目录

Content

1. 基本信息 General Information 4
   1.1 适用范围 Scope 4
   1.2 产品分类 Product Classification 4
   1.3 型号名称 Model Name 4
   1.4 电芯特点 Characteristic 4
   1.5 主要应用 Main Application 4
   1.6 电池组装 Battery Assembly 5
2. 标准规格 Nominal Specification 5
3. 测试条件 Test Conditions 8
   3.1 标准测试条件 Standard Test Conditions 8
   3.2 标准充电 Standard Charging Method 8
   3.3 标准放电 Standard Discharging Method 8
5 环境特性 Environment Characteristic 11
6. 安全特性 Safety Characteristic 12
7. 存储与运输 Storage and Transportation 13
8. 安全守则 Precautions and Safety Instructions 14
9. 技术咨询 Consultation 16
附件 Annex 17

注：本公司电子文件及加盖红色“受控文件”印章的打印文件为受控文件，其它打印文件为非受控文件

1. 基本信息 General Information

1.1 适用范围 Scope

本规格书规定了由湖南华兴锂电新能源有限责任公司生产的圆柱型锂离子电芯的技术要求，测试方法及注意事项，如需获取本规格书以外的技术要求，请与湖南华兴锂电新能源有限责任公司联系相关事宜。

This specification describes the technical requirements,testing methods and caution instructions of cylindrical lithium-ion cells supplied by Hunan Huaxing Lithium Battery New Energy Co., Ltd. Please feel freely to contact us if any further technical information is needed.

1.2 产品分类 Product Classification

磷酸铁锂电芯

Lithium $LiFePO_4$ Cell

1.3 型号名称 Model Name

32700- 7000mAh

1.4 电芯特点 Characteristic

- 抗压镀镍钢外壳 Pressure resistant and electroplating steel envelope
- 高容量 High capacity
- 长循环寿命 Long cycle life
- 显著的高温性能 Remarkable high temperature performance
- 电压输出稳定 Steady output voltage
- 自放电小 Low self-discharge
- 双重安全保护 Double safety protection
- 高抗振和抗冲击能力 High resistance to vibration and shock

1.5 主要应用 Main Application

- 电动交通工具（二轮车、三轮车、四轮低速车、AGV、电动洗地机、电动叉车）Electric two-wheeled, three-wheeled and four-wheeled low-speed vehicles
- 通信后备储能电源 Communication backup energy storage power supply
- 储能（户外储能/工商业储能）Storage energy（Outdoor energy storage/Industrial and commercial energy storage）

1.6 电池组装 Battery Assembly

单个电芯根据具体应用组装成一定规格的电池组，由电池组与电子系统共同参与完成电池组的性能管理、热管理和安全管理。

Individual cells should be integrated into specific battery packs according to customers' demands. The battery packs and the electronic system jointly participate in the performance management, thermal management and safety management.

2. 标准规格 Nominal Specification

项目 Item	条件 Condition/ Note	规格 Specification	备注
2.1 标称容量 Nominal Capacity	1C 放电容量 1C Discharge Capacity	≥7.0Ah	
2.2 交流内阻 AC Impedance	在 1000 Hz 下测量 At AC 1000 Hz	≤8mΩ	
2.3 直流内阻 DC Impedance	直流内阻 DC Impedance =（V1-V2)/1C 放电电流 1C Discharge Current	≤17mΩ	50%SOC
2.4 标称电压 Nominal Voltage		3.2V	
2.5 月自放电率 Monthly self discharge rate	新电芯标准充电至 30% SOC， 25℃±2℃存储 3 个月 Fresh cell 30%SOC，25± 2°C storage 3 month	≤3%/月 Per month ≤3%	
2.6 电芯尺寸 Cell Size	裸体电芯头部直径 Cell top diameter without pvc sleeve	32.2±0.3 mm Max. 32.5 mm	图形结构详细信息，请参阅附图 1-3。 For details, please prefer to Figure 1-3.
	裸体电芯颈部直径 Cell neck diameter without pvc sleeve	32.4±0.1 mm Max. 32.5 mm	
	裸体电芯高度 Cell Height without pvc sleeve	70.5+0.4/-0.3 mm Max. 70.9 mm	
	包膜后电芯头部直径 Cell top Diameter with PVC sleeve	32.4±0.3 mm Max. 32.7 mm	

	包膜后电芯颈部直径 Cell neck Diameter with PVC sleeve	32.64±0.14 mm Max. 32.78 mm	
	正丝负丝电芯高度 Height of cell include screw on positive and negative	83.6+0.4/-0.3 mm Max. 84 mm	
	正丝负柱电芯高度 Height of cell include screw on positive and studs on negative	82.8+0.4/-0.3 mm Max. 83.2 mm	
2.7 电芯重量 Cell Weight	裸体电芯 Naked battery cells	145± 5 g	
2.8 充电截止电压 End-of-charge Voltage	恒流充电 CC Mode	3.65V	
2.9 充电截止电流 End-of-charge Current	恒压充电 CV Mode	≤0.3A	
2.10 充放电方式 Charging Discharge Method	标准充放电 Standard Charging Discharge	1 C at CC/CV、DC	可支持≤1C 进行充放电. Can support to ≤ 1C perform charging and discharging.
2.11 放电截止电压 End-of-discharge Voltage	恒流放电 CC Mode	2.0V	
2.12 最大持续充放电电流 Max continuous Charging Discharging Current	恒流恒压充电 CC/CV Mode 恒流放电 DC Mode	21A	仅限于单体电芯，电池组建议最大持续充放电电流≤1C. Only applicable to individual battery cells，it is recommended that the maximum continuous charging and discharging current of the battery pack be ≤ 1C.
2.13 最大瞬时放电电流 Max Pulse Discharging Current		42A	3s
2.14 循环性能 Cycle Life	1 C/ 100 % DOD	2000cycles	

注：本公司电子文件及加盖红色“受控文件”印章的打印文件为受控文件，其它打印文件为非受控文件

2.15 操作温度范围 Operating Temperature Range	建议充电温度 Suggested charging Temperature		＜0 °C	不建议充电 Not recommended for charging
			0~10 °C	≤0.2C
			10~15 °C	≤0.5C
			15~45 °C	≤1C
			45~60 °C	≤0.5C
	放电温度 Discharging Temperature		-20~ 60°C	1C
	储存温度 Storage Temperature		0~ 45°C	
2.16 外观 Appearance		无破裂、划痕、变形、污渍、电解液泄露等 Without break, scratch, distortion, contamination, leakage and so on		

备注 Notes：

此规格书中相关测试标准及数据只限于单体电池，仅供电池组测试或使用参考。

The relevant testing standards and data in this specification are limited to individual batteries and are only for reference in module battery testing or use.

3. 测试条件 Test Conditions

3.1 标准测试条件 Standard Test Conditions

若无特别要求，此规格书上产品测试条件室温为：温度 28-30 °C，湿度 15~90 %RH，大气压力 86 kPa~106 kPa。

All tests stated in this Specification are conducted on condition of 28-30 °C, 15~90 %RH and atmospheric pressure of 86 kPa~ 106 kPa if no otherwise requirement.

3.2 标准充电 Standard Charging Method

“标准充电”即在标准测试条件下，电芯先以恒定电流 1 C 充电至 3.65 V，再以 3.65 V 的恒定电压充电至电流小于 0.05 C，搁置 1h。

Standard Charging means that the cells are firstly charged till 3.65 V at 1C constant current, and then charged till current less than 0.05 C at 3.65 V constant voltage and finally shelved for 1 h on the standard test condition.

3.3 标准放电 Standard Discharging Method

“标准放电”即在标准测试条件下，电芯以恒定电流 1 C 放电至 2.0 V。

Standard Discharging means that the cells are discharged till 2.0V at 1C constant current on the standard test condition.

注：本公司电子文件及加盖红色“受控文件”印章的打印文件为受控文件，其它打印文件为非受控文件

4. 电性能 Electrochemical Performance

测试项目 Test Item	测试方法 Test Method	检验标准 Criteria
4.1 交流内阻 AC Impedance	电芯按 3.2 规定充电后在 1000 Hz 下测量。 Cell shall be measured at 1000 Hz after charged as per 3.2.	≤ 8mΩ
4.2 直流内阻 DC Impedance	1. 电芯先按 3.2 规定充电，搁置 5 分钟，再按 3.3 规定放电并记录放电容量，搁置 5 分钟，再将电池以 1C 电流充电至 50%SOC（充电电流及截止容量设置以分容后实际放电容量为基准）； Firstly cell shall be charged according to the testing process in 3.2, Shelving for 5 minutes, Then discharge it according to 3.3 and record the discharge capacity, Shelving for 5 minutes, then charge the battery to 50% SOC at 1C (the charging current and cut-off capacity are set based on the actual discharge capacity after capacity division); 2. 1C 放电 10S：记录放电前电压 V1；放电 10S 后电压 V2（放电电流设置以分容后实际放电容量为基准）； 1C discharge for 10S: Record the voltage V1 before discharge;Voltage V2 after discharging for 10 seconds (the discharge current is set based on the actual discharge capacity after capacity sorting); 3. 计算直流内阻：直流内阻=（V1-V2)/1C 放电电流。 Calculate the DC internal resistance: DC internal resistance=(V1-V2)/1C discharge current.	≤ 17mΩ
4.3 初始容量（C_{ini}） Initial Capacity	电芯按 3.2 规定充电后，按 3.3 规定完全放电。 Cell shall be charged per 3.2 and discharged per 3.3 within 1h after full charge.	初始容量：≥ 7.0 Ah Initial capacity：≥ 7.0Ah

注：本公司电子文件及加盖红色“受控文件”印章的打印文件为受控文件，其它打印文件为非受控文件

4.4 电压自放电 Voltage self discharge	室温(25℃±2℃)下： ①单体蓄电池先以 0.2C 电流恒流恒压充电至 3.16V，截止电流≤0.05C；蓄电池在 25℃士 5℃下搁置 5h 后，测电压，以此电压为初始电压； ②将不带满电的蓄电池开路放置在温度 25℃±2℃的环境下贮存 10 天； ③蓄电池在 25℃士 5℃下静置 5h 后，测电压； 电池电压 K 值即为：(初始电压-静置后测量电压)/10 天。 At room temperature (25 ℃± 2 ℃): ① The individual battery is first charged to 3.16V at a constant current and voltage of 0.2C, with a cut-off current of ≤ 0.05C; After storing the battery at 25 ℃ ± 5 ℃ for 5 hours, measure the voltage and use this voltage as the initial voltage; ② Open the fully charged battery and store it in an environment with a temperature of 25 ℃± 2 ℃ for 10 days; ③ After standing for 5 hours at 25 ℃ ± 5 ℃, measure the voltage of the battery; The battery voltage K value is: (initial voltage - measured voltage after settling)/10 days.	25℃ K 值（5%SOC）：≤1mV/d； 25℃ K value（5%SOC）：≤1mV/d；
4.5 常温 1C 循环寿命 Normal Temperature 1C Cycle Life	电芯在室温下（28±2℃）按 1 C CC/CV 充电后搁置 10 min，然后以 1 C 恒流放电至 2.0 V 结束，搁置 10 min，再进行下一次循环，连续 2000 次。 Cell shall be firstly shelved for 10min after charged at CC/CV mode (CC: 1 C, CV: 3.65 V, End-of-charge current: 0.05 C) and then shelved for 10min after discharged at CC mode (1 C, End-of-charge voltage: 2.0 V). The next cycle will be tested again and continued for 2000 times.	容量保持率：≥80 % Capacity retention ：≥ 80 %
4.6 常温 3C 循环寿命 Normal Temperature 3C Cycle Life	电芯在室温下（28±2℃）按 3 C CC/CV 充电后搁置 10 min，然后以 3 C 恒流放电至 2.0 V 结束，搁置 10 min，再进行下一次循环，连续 700 次。 Cell shall be firstly shelved for 10min after charged at CC/CV mode (CC: 3 C, CV: 3.65 V, End-of-charge current: 0.05 C) and then shelved for 10min after discharged at CC mode (3 C, End-of-charge voltage: 2.0 V). The next cycle will be tested again and continued for 700 times.	容量保持率：≥80 % Capacity retention ：≥ 80 %

4.7 倍率放电性能 High-rated Discharging Performance	电芯按 3.2 规定充电后，电芯以恒定电流 3C 放电 2.0V。 Cell shall be charged as per 3.2 and discharged till 2.0 V at 3C constant current.	放电容量：≥ 99%C_{ini} Discharge capacity： ≥ 99%C_{ini}
4.8 低温性能 Low Temperature Performance	电芯按 3.2 规定充电后，将电芯放入一定温度的低温箱中恒温 4 h，然后以 1 C 电流放电至终止电压。 Cell shall be stored in a low temperature environment for 4 h after charged as per 3.2 and then discharged at 1C till ending voltage.	放电容量： Discharge Capacity: ≥ 50%C_{ini}（-20°C） ≥ 70%C_{ini}（-10°C） ≥88 %C_{ini}（-0°C） ≥ 90%C_{ini}（5°C） ≥ 92%C_{ini}（10°C）
4.9 常温存储 Room Temperature Storage Test	电芯按 3.2 规定充电后，在 25 °C ±2 °C 下搁置 28 天，再以 1 C 恒流放电至终止电压。 Cell shall be stored at 25 °C ±2 °C for 28 days after charged as per 3.2 and then discharged at 1 C till ending voltage.	容量保持率：≥ 95% Capacity retention：≥95% 容量恢复率：≥97% Capacity recovery rate：≥97%
4.10 高温存储 High Temperature Storage Test	电芯按 3.2 规定充电后，在 60 °C ±2 °C 下搁置 10 天后，室温搁置 5h，再以 3.3 规定放电。 Cell shall be shelved firstly at 60 °C ±2 °C for 10 days and then at room temperature for 5h after charged as per 3.2. Finally it's discharged as per 3.3.	容量保持率：≥ 93 % Capacity retention：≥ 93% 容量恢复率：≥95% Capacity recovery rate：≥95%

5 环境特性 Environment Characteristic

测试项目 Test Item	测试方法 Test Method	检验标准 Criteria
5.1 恒温恒湿性能 Constant Temperature and Humidity Test	电芯按 3.2 规定充电后，将电芯放入 45 °C ±2 °C（90~95% RH）的恒温恒湿箱中搁置 48h 后取出，在室温下搁置 2 h，观察 1h。 Cell shall be shelved firstly in 45 °C ±2 °C (90~95% RH) for 48h and then at room temperature for 2h after charged as per 3.2.Finally check it for 1h.	电芯无变形、无锈蚀、不冒烟、不爆炸 No distortion, no rust, no fume and no explosion.
5.2 温度冲击性能 Thermal Shock Test	电芯按 3.2 规定充电后，放入温度箱中，60 min 内降至-40 °C，保持 90 min 后，在 60 min 内升至 25 °C，再在 90 min 内升至 85 °C，保持 110 min，然后在 70 min 内降至 25 °C。重复上述步骤 5 次，观察 1h。 Cell shall be charged as per 3.2 and then put into an oven. Temperature inside drops to -40 °C within 60min and remains for 90min. Then it rises to 25 °C within 60min,keeps rising to 85 °C within 90min and then remains for 110 min. Finally it drops to 25 °C within 70min. Repeat this process for 5 times and then check it for 1h.	电芯不爆炸、不起火、不漏液 No explosion, no fire, no leakage.

注：本公司电子文件及加盖红色“受控文件”印章的打印文件为受控文件，其它打印文件为非受控文件

5.3 低气压测试 Low-pressure Test	电芯按 3.2 规定充电后，放入低气压箱中，调节气压为 11.6 kPa，温度为室温，静置 6 h 后，观察 1h。 Cell shall be charged as per 3.2 and then shelved for 6h at an absolute pressure of 11.6 kPa (RT). Check it for 1h.	电芯不爆炸、不起火、不漏液 No explosion, no fire, no leakage.
5.4 跌落测试 Drop Test	电芯按 3.2 规定充电后，正负端子向下从 1.5 m 高度自由跌落到水泥地面上，观察 1h。 Cell shall be charged as per 3.2 and then dropped from a height of 1.5m onto the concrete ground. Positive and negative terminals of cells shall be towards the ground. Check it for 1h.	电芯不爆炸、不起火、不漏液 No explosion, no fire, no leakage.
5.5 浸泡测试 Soaking Test	电芯按 3.2 规定充电后，完全浸入 3.5 wt% NaCl 溶液中 2 h，观察 1 h。 Cell shall be charged as per 3.2 and then completely soaked into NaCl solution (3.5 wt %) for 2h. Check it for 1h.	电芯不爆炸、不起火 No explosion, no fire.

6. 安全特性 Safety Characteristic

测试项目 Test Item	测试方法 Test Method	检验标准 Criteria
6.1 短路 External Short-Circuiting Test	电芯按 3.2 规定充电后，将正、负极经外部短路 10 min，外部线路电阻应小于 5 mΩ；静置 1h。 Cell shall be charged as per 3.2 and then short-circuited by connecting the positive and negative terminals with a resistance <5 mΩ for 10min. Check it for 1h.	电芯不爆炸、不起火 No explosion, no fire.
6.2 过充电 Over-charge Test	电芯按 3.2 规定充电后，以 1C 电流充电至 5.5 V 或充电达 1h 后停止充电，观察 1h。 Cell shall be charged as per 3.2, then charged at 1C to ending voltage of 5.5 V or charged at 1C for 1h. Check it for 1h.	电芯不爆炸、不起火 No explosion, no fire.
6.3 过放电 Over-discharge Test	电芯按 3.2 规定充电后，以 1C 电流放电 90min，观察 1h。 Cell shall be charged as per 3.2, then discharged at 1C for 90 min. Check it for 1h.	电芯不爆炸、不起火、不漏液 No explosion, no fire, no leakage.

注：本公司电子文件及加盖红色“受控文件”印章的打印文件为受控文件，其它打印文件为非受控文件

6.4 挤压测试 Crush Test	电芯按 3.2 规定充电后，以半径为 75 mm 半圆柱体垂直电芯极板方向，以(5±1) mm/s 速度挤压，当电压为 0 V 或变形量达到 30%或挤压力达到 200 kN 后停止挤压，观察 1h。 Cell shall be charged as per 3.2, then crushed vertically to the cell plate at a rate of (5±1) mm/s with a semi-cylinder (radius of 75 mm). When any of the following criteria is met, stopping crushing and check it for 1h. 1. Voltage reaches 0V; 2. Deformation reaches 30%; 3. Pressure reaches 200 kN.	电芯不爆炸、不起火 No explosion, no fire.
6.5 热冲击测试（130 °C） Heating Test	电芯按 3.2 规定充电后，放置入温度箱，以 5 °C/min 的速率由室温升至 130 °C±2 °C，并保持 30 min 后停止加热，观察 1h。 Cell shall be charged as per 3.2, then heated in an oven. Temperature rises to 130 °C±2 °C at a rate of 5°C/min.Stop heating after remaining for 30min. Check it for 1h.	电芯不起火，不爆炸。 No explosion, no fire.
6.6 针刺测试 Acupuncture Test	电芯按 3.2 规定充电后，用ϕ5 mm~ϕ8 mm 的耐高温钢针，以(25±5)mm/s 的速度，从垂直于蓄电池极板的方向贯穿，贯穿位置宜靠近所刺面的几何中心，钢针停留在蓄电池中，观察 1h。 Cell shall be charged per 3.2,then acupuncture the cell perpendicularly to the cell plate at a rate of (25±5)mm/s with a ϕ5 mm~ϕ8 mm steel needle and remain it inside. The acupuncturing location shall be near the geometric center of plane. Check it for 1h.	电芯不爆炸、不起火 No explosion, no fire.

7. 存储与运输 Storage and Transportation

7.1 由于电芯的特性，需要对电芯进行合适的包装来保护（**蓝色 PVC 膜及 PET 白色面垫绝缘保护，40pcs/小盒，3 小盒每箱，40-48 箱/托板，4 面与每角拉伸膜、护角、打包带进行包装或 25pcs/小盒，4 小盒每箱，50-100 箱/托板，4 面与每角拉伸膜、护角、打包带进行包装**）。

Based on the cells' characteristics , proper packaging is necessary for protecting them during transportation.(Blue PVC film and PET white surface pad insulation protection, 40pcs/small box, 3 small boxes per box, 40-48 boxes/pallet, 4 sides packaged with stretch film, corner protectors, and strapping at each corner and 25pcs/small box, 4 small boxes per box, 50-100 boxes/pallet, 4 sides packaged with stretch film, corner protectors, and strapping at each corner))

注：本公司电子文件及加盖红色“受控文件”印章的打印文件为受控文件，其它打印文件为非受控文件

7.2 运输过程中建议电芯带电量为 5%-30% SOC，以确保不受短路和液体的损伤。

During transportation, it is recommended that the battery cells have a charged capacity of 5% -30% SOC to ensure they are not damaged by short circuits and liquids.

7.3 电芯需在 0 °C-45 °C 的干燥、清洁、通风的环境下存储。

Cell should be kept at 0°C-45°C in warehouse where it's dry, clean and well-ventilated.

7.4 装卸电池时需注意避免跌落、翻转和堆积。

During loading and unloading, attention must be paid against dropping, turning over and serious stacking.

8. 安全守则 Precautions and Safety Instructions

为避免电芯泄露，过热和爆炸，请注意以下事项：

In order to prevent the battery from leakage, getting hot and explosion, please pay attention to following points.

Warning!

- 请勿将电池投入水中。非使用时，电池需在干燥阴凉处存放。

  Never throw the battery into water. Store it under dry, shady circumstance when not use.
- 请勿颠倒正负极使用。

  Never misidentify the positive and negative terminals.
- 请勿直接用金属接通正负极，避免短路。

  Never connect the positive and negative terminals of battery with metal to prevent short-circuiting.
- 请勿将电池与金属一起储存或运输。

  Never ship or store the battery together with metal.
- 请勿敲击、投掷或踩踏电池。

  Never knock, throw or trample the battery.
- 请勿用钉子或其它利器破坏电池。

  Never cut through the battery with nail or other edge tool.

Tips!

- 请勿在过高的温度下使用或储存电池，否则会引起电池过热，致使寿命减短和性能降低，甚至起火。长时间储存的温度范围建议是 10~45 °C。

  Never use or store the battery under the over-high temperature. Otherwise it will lead to battery over-heating, which might lose some function and reduce life, even getting fire. The proposed temperature for long-term storage is

10~45°C.

- 请勿将电池投入火中或其它热源中，避免起火、爆炸和环境污染。废电池需回收至供应商处，移交回收站处理。

  Never throw the battery into fire or heating machine to avoid fire, explosion and environment pollution; scrap battery should be returned to the supplier and handled by the recycle station.

- 请勿将电池置于强静电场或强磁场中，否则会破坏保护设备。

  Never use the battery under strong static electronic and magnetic field, otherwise it will destroy the protecting device.

- 若电解液泄露并进入眼睛，请勿揉捏，经水洗后尽快就医。

  Never knead eyes if leakage electrolyte gets into eyes. Wash eyes by water and seek medical advice ASAP.

- 若电池在使用、储存、充电过程中发出异味，过热，形变或其他非常规情况，请停止使用并移除设备。

  If battery emits peculiar smell, over-heating, distortion or any unconventionality happens during using, storage or charging process, please stop using and take it out of the device.

- 请勿在充电中直接插拔电池，并使用规定充电设备进行充电。

  Never cut the battery in socket directly, please use the stated charger when charging.

- 使用前请检查电池电压和相关连接器；若有异常请勿使用。

  Check the voltage of battery and relevant connectors before using. Do not use until everything turns out to be normal.

- 在充电前请检查相关设备绝缘性、物理状态和老化情况。电池电压需高于截止电压，如有异常，需标记并勿更改现状，然后通知我们售后服务部门，待我们工作人员到场维修。

  Prior to charging, fully check the insulativity, physical condition and ageing status. The pack voltage must not be less than the cut-off voltage, if not, it needs to be labeled. The user should contact our Customer Service Department. It can't be charged until repaired by our staff.

- 电池可在 5%-30 %SOC 下储存，小于 10%S0C 下若 1 个月未使用，需重新充电；10%-30%S0C 下若 3 个月未使用，需重新充放电。

  The battery should be stored in 5%-30% SOC. It needs to be charged again if out of use for one month under 10%SOC. If 10% -30%SOC is not used for 3 months, it should be recharged and discharged.

注：本公司电子文件及加盖红色“受控文件”印章的打印文件为受控文件，其它打印文件为非受控文件

- 若电极端子污染，需用干净、干燥的棉布擦拭，否则会导致接触和操作不良。
  Clean the dirty electrode with a clean dry cloth if any contamination appears, otherwise poor contact or operation failure may occur.

9. 技术咨询 Consultation

如有疑问，请按以下方式咨询：

Please don't hesitate to contact us if any question.

湖南华兴锂电新能源有限责任公司

HUNAN HUAXING LITHIUM BATTERY NEW ENERGY CO., LTD.

地址：湖南省长沙市宁乡市金水西路 399 号

Address: No.399 Jinshui West Road,Ningxiang High-tech Industrial Park,Changsha,Hunan,410600 China

邮政编码：410600　Postcode: 410600

电话（Tel）：0731-88310888　传真（Fax）：0731-88310888

邮箱（Mailbox）：info@huaxingenergy.com

10. 引用文件 Reference files

QC/T 743-2006 电动汽车用锂离子蓄电池
Lithium ion batteries for electric vehicles
GB 43854-2024 电动自行车用锂离子蓄电池安全技术规范
Safetytechnicalspecificationoflithium-ionbatteryforelectricbicycle
GBT 31486-2015 电动汽车用动力蓄电池电性能要求及试验方法
Electrical performance requirements and test methods for traction battery of electric vehicle
GBT 31484-2015 电动汽车用动力蓄电池循环寿命要求及试验方法
Cycle life requirements and test methods for traction battery of electric vehicle
GBT 38031-2020 电动汽车用动力蓄电池安全要求
Electric vehicles traction battery Safety requirements
HX-TS-047 磷酸铁锂电芯测试技术标准
Technical standard for testing lithium iron phosphate battery cells

注：本公司电子文件及加盖红色“受控文件”印章的打印文件为受控文件，其它打印文件为非受控文件

附件 Annex

附图 1 /Figure1

电池图片和外形尺寸

Cell's appearance and dimension



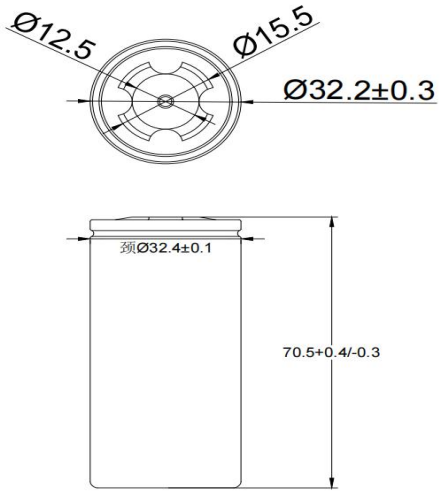

电池包膜后图片和外形尺寸

Cell's appearance and dimension with PVC sleeve



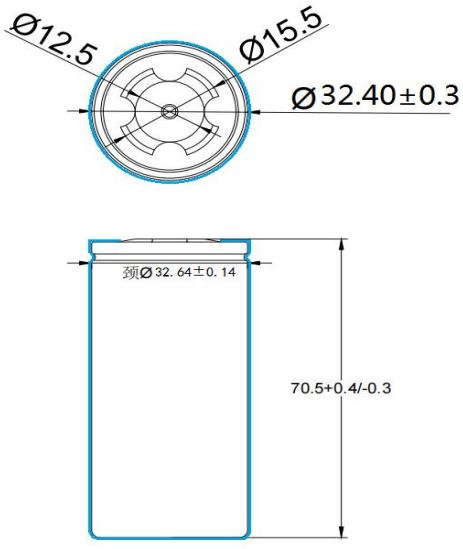

注：本公司电子文件及加盖红色“受控文件”印章的打印文件为受控文件，其它打印文件为非受控文件

附图 2 /Figure2

丝柱电池图片和外形尺寸

The Cell's with welded screw appearance and dimension



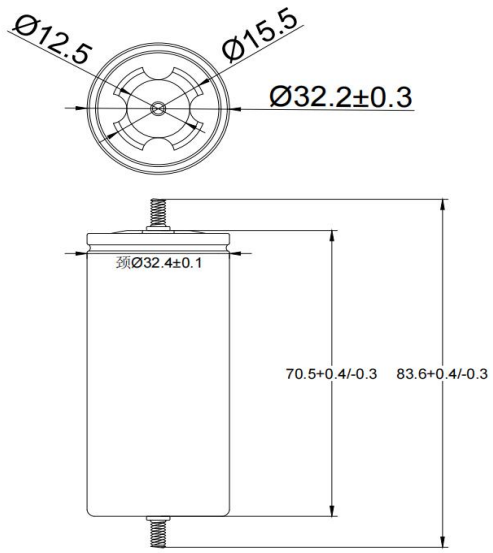

丝柱电池包膜后图片和外形尺寸

The Cell's with welded screw appearance and dimension with PVC sleeve



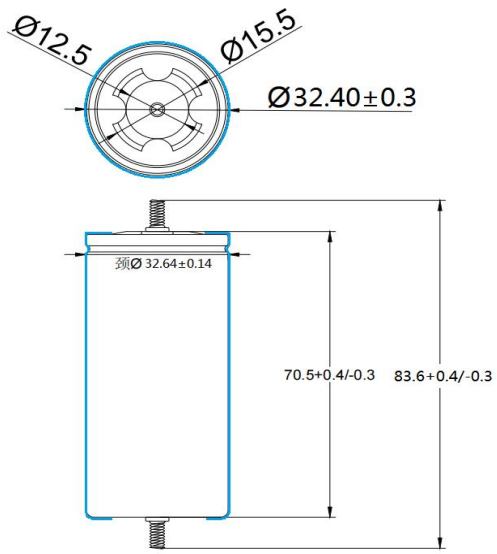

注：本公司电子文件及加盖红色“受控文件”印章的打印文件为受控文件，其它打印文件为非受控文件

附图 3 /Figure3

丝柱电池图片和外形尺寸

The Cell's with welded screw appearance and dimension



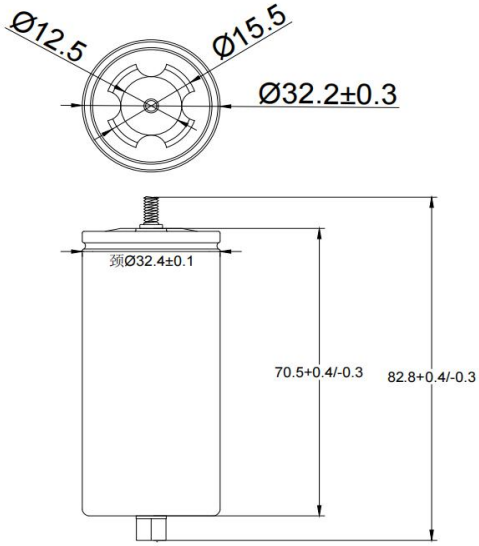

丝柱电池包膜后图片和外形尺寸

The Cell's with welded screw appearance and dimension with PVC sleeve



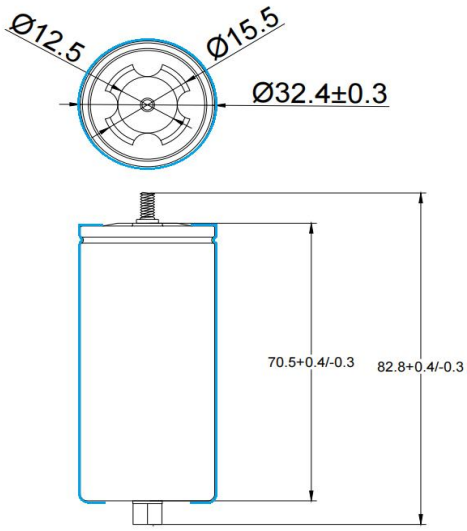

注：本公司电子文件及加盖红色“受控文件”印章的打印文件为受控文件，其它打印文件为非受控文件

附图 4 /Figure4

7.0Ah 磷酸铁锂系电池不同倍率充电曲线

Different rate charge curve of7.0Ah $LiFePO_4$ cell

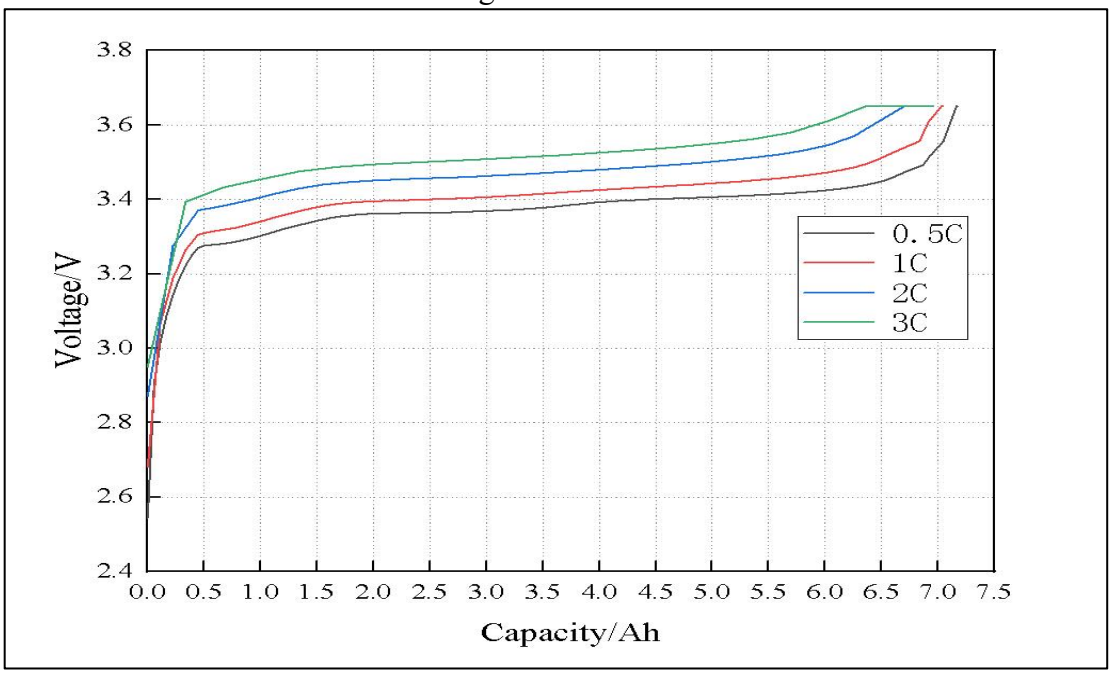

附图 5 /Figure5

7.0Ah 磷酸铁锂系电池不同倍率放电曲线

Different rate discharge curve of 7.0Ah $LiFePO_4$ cell

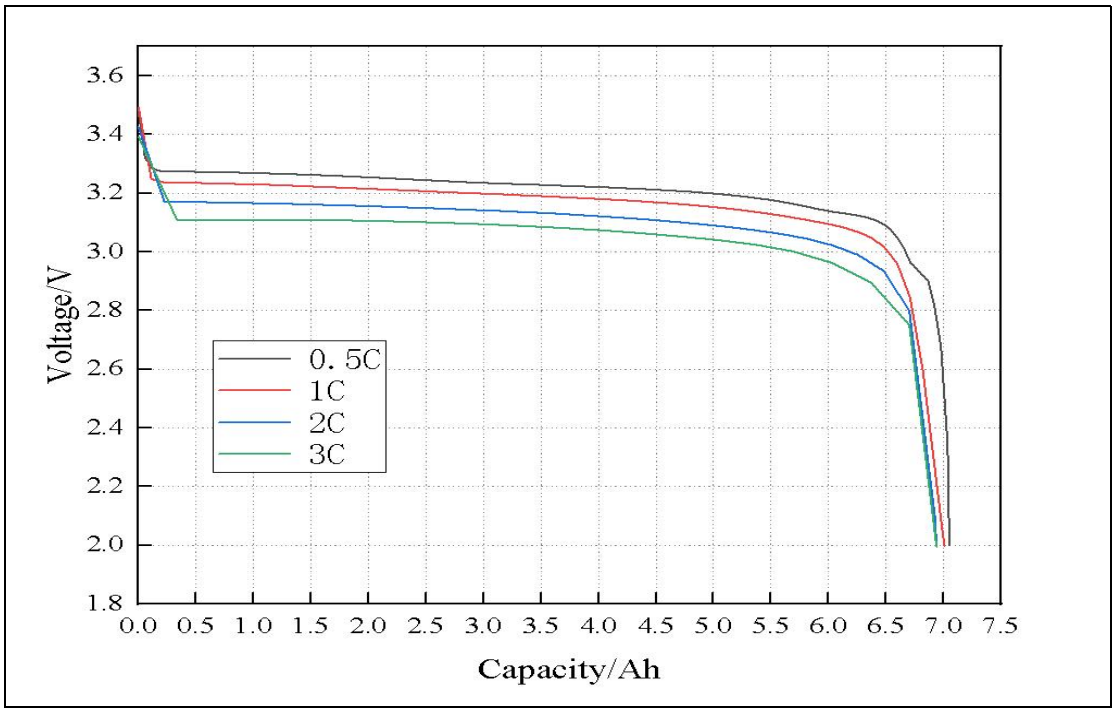

注：本公司电子文件及加盖红色“受控文件”印章的打印文件为受控文件，其它打印文件为非受控文件

附图 6 /Figure6

7.0 Ah 磷酸铁锂电池不同温度放电曲线（1C）

Discharge curve of 7.0 Ah $LiFePO_4$ cell at different temperatures(1C)

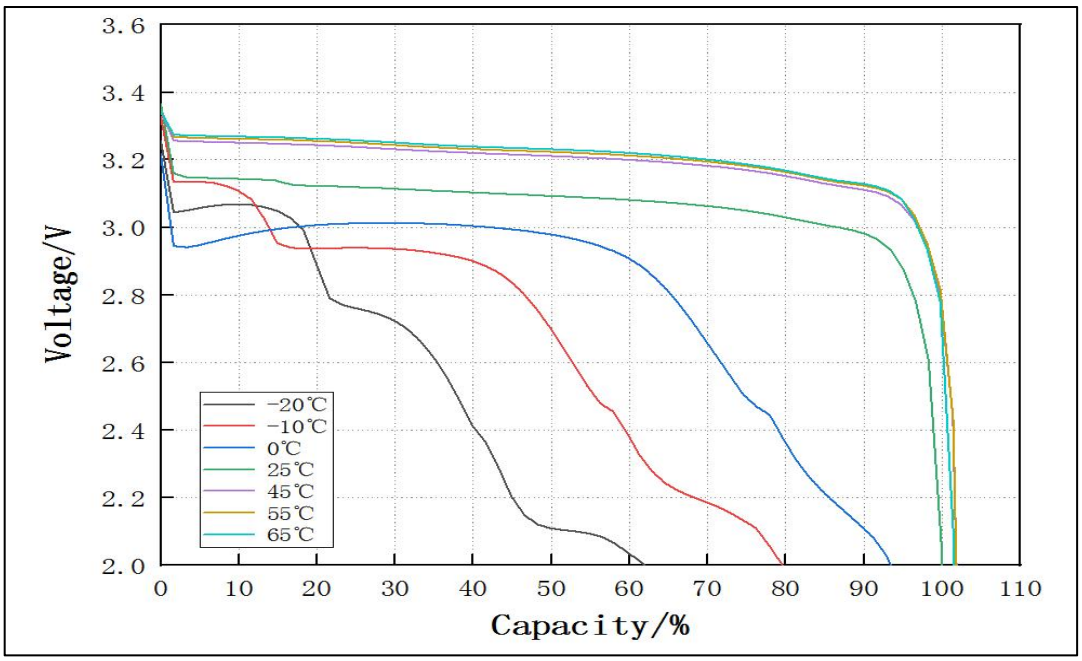

附图 7 /Figure7

7.0 Ah 磷酸铁锂电池 30±2℃ 1C 循环曲线图

30±2℃ 1C cycle curve of 7.0Ah $LiFePO_4$ cell

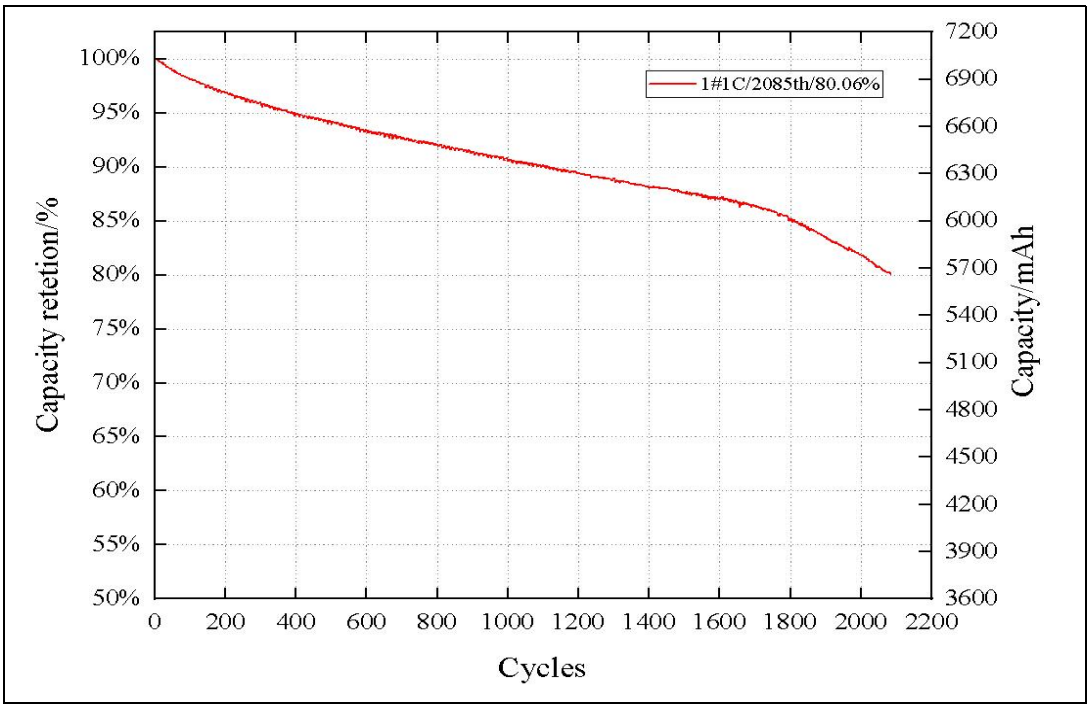

注：本公司电子文件及加盖红色“受控文件”印章的打印文件为受控文件，其它打印文件为非受控文件

附图 8 /Figure8

7.0 Ah 磷酸铁锂电池 30±2℃ 3C 循环曲线图

30±2℃ 3C cycle curve of 7.0Ah $LiFePO_4$ cell

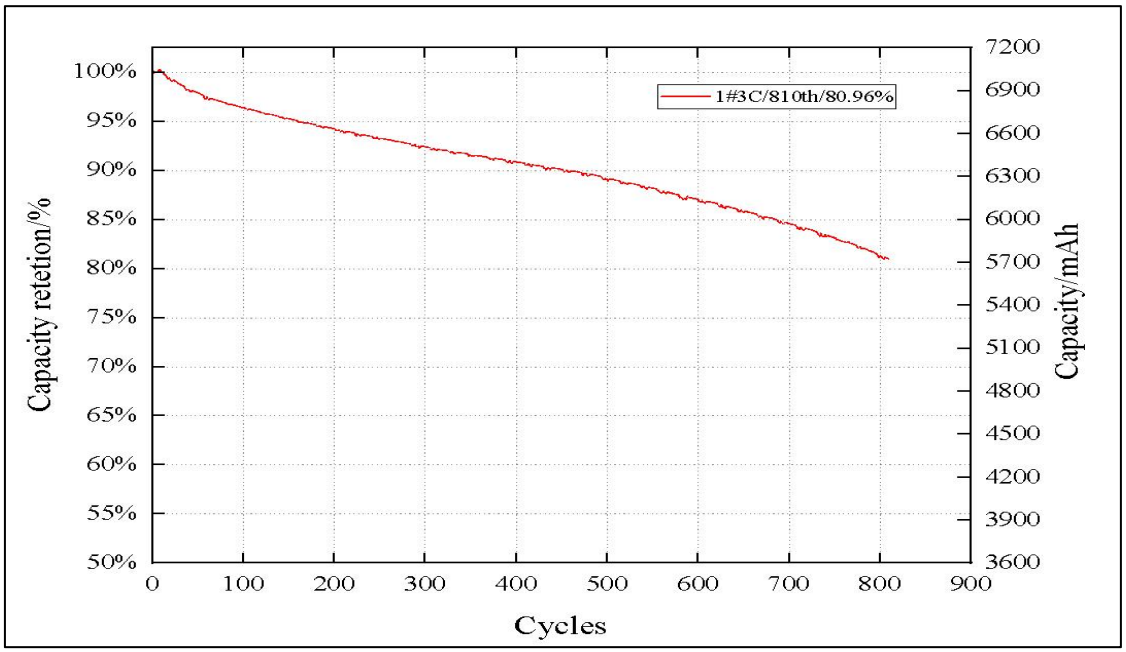

附图 9 /Figure9

不同温度容量差值（仅供参考）

Different temperature capacity differences（For reference only）

编号/温度 Number/Temperature	5℃容量 Capacity	15℃容量 Capacity	15℃ and 5℃ Difference	20℃容量 Capacity	20℃ and 15℃ Difference	25℃容量 Capacity	25℃ and 20℃ Difference	28℃容量 Capacity	28℃ and 25℃ Difference
1	6487.7	6706.3	218.6	6855.6	149.3	6984.3	128.7	7056.1	71.8
2	6508.5	6724.3	215.8	6880.7	156.4	7007.2	126.5	7094.5	87.3
均值 mean value	6498.1	6715.3	217.2	6868.15	152.85	6995.75	127.6	7075.3	79.55
编号/温度 Number/Temperature	/	30℃容量 Capacity	30℃ and 28℃ Difference	32℃容量 Capacity	32℃ and 30℃ Difference	35℃容量 Capacity	35℃ and 32℃ Difference	40℃容量 Capacity	40℃ and 35℃ Difference
1		7070.8	14.7	7080.1	9.3	7084.7	4.6	7088.0	3.3
2		7107.0	12.5	7115.7	8.7	7119.6	3.9	7122.5	2.9
均值 mean value		7088.9	13.6	7097.9	9.0	7102.15	4.25	7105.25	3.1

注：本公司电子文件及加盖红色“受控文件”印章的打印文件为受控文件，其它打印文件为非受控文件

附图 10 /Figure10

5%SOC 不同温度容量衰减
5%SOC Capacity decay rate at different temperatures

温度 temperature	28℃	带电量 State of Charge		5%				
存储天数 Storage days	30 天 30d	60 天 60d	90 天 90d	120 天 120d	150 天 150d	180 天 180d	240 天 240d	360 天 360d
1.5 次恢复率 1.5 cycle capacity recovery rate	99.05%	98.76%	99.03%	98.92%	99.03%	99.05%	98.93%	98.53%
2.5 次恢复率 2.5 cycle capacity recovery rate	98.97%	98.62%	98.88%	98.57%	98.91%	98.84%	98.51%	98.57%
温度 temperature	35℃	带电量 State of Charge		5%				
存储天数 Storage days	30 天 30d	60 天 60d	90 天 90d	120 天 120d	150 天 150d	180 天 180d	240 天 240d	360 天 360d
1.5 次恢复率 1.5 cycle capacity recovery rate	99.20%	99.04%	98.91%	98.55%	99.03%	98.37%	99.25%	99.01%
2.5 次恢复率 2.5 cycle capacity recovery rate	99.05%	98.96%	99.02%	98.43%	99.01%	98.16%	99.17%	98.97%
温度 temperature	45℃	带电量 State of Charge		5%				
存储天数 Storage days	30 天 30d	60 天 60d	90 天 90d	120 天 120d	150 天 150d	180 天 180d	240 天 240d	360 天 360d
1.5 次恢复率 1.5 cycle capacity recovery rate	98.97%	98.63%	98.80%	98.43%	98.39%	97.75%	97.18%	96.79%
2.5 次恢复率 2.5 cycle capacity recovery rate	98.86%	98.53%	98.64%	98.35%	98.17%	97.52%	96.98%	96.61%
温度 temperature	60℃	带电量 State of Charge		5%				
存储天数 Storage days	30 天 30d	60 天 60d	90 天 90d	120 天 120d	150 天 150d	180 天 180d	240 天 240d	360 天 360d
1.5 次恢复率 1.5 cycle capacity recovery rate	98.06%	97.11%	97.16%	96.20%	96.53%	96.16%	96.57%	96.96%
2.5 次恢复率 2.5 cycle capacity recovery rate	98.11%	96.97%	97.07%	96.18%	96.41%	96.10%	96.40%	96.50%

注：本公司电子文件及加盖红色“受控文件”印章的打印文件为受控文件，其它打印文件为非受控文件

附图 11 /Figure11

30%SOC 不同温度容量衰减
30%SOC Capacity decay rate at different temperatures

温度 temperature	28℃	带电量 State of Charge		30%				
存储天数 Storage days	30 天 30d	60 天 60d	90 天 90d	120 天 120d	150 天 150d	180 天 180d	240 天 240d	360 天 360d
1.5 次恢复率 1.5 cycle capacity recovery rate	98.28%	97.75%	97.44%	97.14%	96.84%	96.57%	96.45%	95.92%
2.5 次恢复率 2.5 cycle capacity recovery rate	98.24%	97.70%	97.53%	97.16%	96.87%	96.64%	96.53%	95.94%
温度 temperature	35℃	带电量 State of Charge		30%				
存储天数 Storage days	30 天 30d	60 天 60d	90 天 90d	120 天 120d	150 天 150d	180 天 180d	240 天 240d	360 天 360d
1.5 次恢复率 1.5 cycle capacity recovery rate	98.23%	97.77%	97.49%	97.08%	96.69%	96.26%	96.15%	96.05%
2.5 次恢复率 2.5 cycle capacity recovery rate	98.17%	97.68%	97.53%	97.10%	96.96%	96.09%	96.21%	96.10%
温度 temperature	45℃	带电量 State of Charge		30%				
存储天数 Storage days	30 天 30d	60 天 60d	90 天 90d	120 天 120d	150 天 150d	180 天 180d	240 天 240d	360 天 360d
1.5 次恢复率 1.5 cycle capacity recovery rate	97.11%	96.36%	95.57%	94.56%	93.59%	92.17%	93.16%	87.23%
2.5 次恢复率 2.5 cycle capacity recovery rate	97.06%	96.34%	95.66%	94.56%	93.59%	92.18%	92.98%	87.19%
温度 temperature	60℃	带电量 State of Charge		30%				
存储天数 Storage days	30 天 30d	60 天 60d	90 天 90d	120 天 120d	150 天 150d	180 天 180d	240 天 240d	360 天 360d
1.5 次恢复率 1.5 cycle capacity recovery rate	95.41%	92.51%	91.63%	89.31%	86.47%	85.76%	85.50%	82.99%
2.5 次恢复率 2.5 cycle capacity recovery rate	95.54%	92.49%	91.72%	89.25%	86.50%	85.42%	85.46%	82.95%

注：本公司电子文件及加盖红色“受控文件”印章的打印文件为受控文件，其它打印文件为非受控文件

附图 12 /Figure12

100%SOC 不同温度容量衰减
100%SOC Capacity decay rate at different temperatures

温度 temperature	28℃	带电量 State of Charge		100%				
存储天数 Storage days	30 天 30d	60 天 60d	90 天 90d	120 天 120d	150 天 150d	180 天 180d	240 天 240d	360 天 360d
1.5 次恢复率 1.5 cycle capacity recovery rate	96.52%	95.23%	94.10%	93.87%	93.61%	92.53%	92.91%	91.60%
2.5 次恢复率 2.5 cycle capacity recovery rate	96.70%	95.30%	94.38%	94.01%	93.77%	92.78%	93.04%	91.88%
温度 temperature	35℃	带电量 State of Charge		100%				
存储天数 Storage days	30 天 30d	60 天 60d	90 天 90d	120 天 120d	150 天 150d	180 天 180d	240 天 240d	360 天 360d
1.5 次恢复率 1.5 cycle capacity recovery rate	96.42%	95.18%	94.20%	93.85%	93.20%	92.99%	92.47%	92.23%
2.5 次恢复率 2.5 cycle capacity recovery rate	96.56%	95.36%	94.40%	94.05%	93.31%	93.12%	92.61%	92.39%
温度 temperature	45℃	带电量 State of Charge		100%				
存储天数 Storage days	30 天 30d	60 天 60d	90 天 90d	120 天 120d	150 天 150d	180 天 180d	240 天 240d	360 天 360d
1.5 次恢复率 1.5 cycle capacity recovery rate	93.60%	92.49%	89.93%	86.91%	83.47%	79.17%	75.59%	69.34%
2.5 次恢复率 2.5 cycle capacity recovery rate	93.73%	92.56%	90.21%	87.14%	83.59%	79.40%	75.72%	69.38%
温度 temperature	60℃	带电量 State of Charge		100%				
存储天数 Storage days	30 天 30d	60 天 60d	90 天 90d	120 天 120d	150 天 150d	180 天 180d	240 天 240d	360 天 360d
1.5 次恢复率 1.5 cycle capacity recovery rate	89.72%	87.55%	84.31%	78.90%	74.31%	72.05%	73.11%	57.19%
2.5 次恢复率 2.5 cycle capacity recovery rate	89.93%	87.71%	84.53%	79.01%	74.44%	72.32%	73.28%	57.17%

注：本公司电子文件及加盖红色“受控文件”印章的打印文件为受控文件，其它打印文件为非受控文件

附图 13 /Figure13

电池运输包装方式 Packaging Method For Battery Transportation



国内运输 Domestic Transportation



国外运输 Foreign Transporta

注：本公司电子文件及加盖红色“受控文件”印章的打印文件为受控文件，其它打印文件为非受控文件

附图 14 /Figure14

电池运输包装方式 Packaging Method For Battery Transportation



国外运输（定制款） Foreign Transporta（Customized）

注：本公司电子文件及加盖红色“受控文件”印章的打印文件为受控文件，其它打印文件为非受控文件